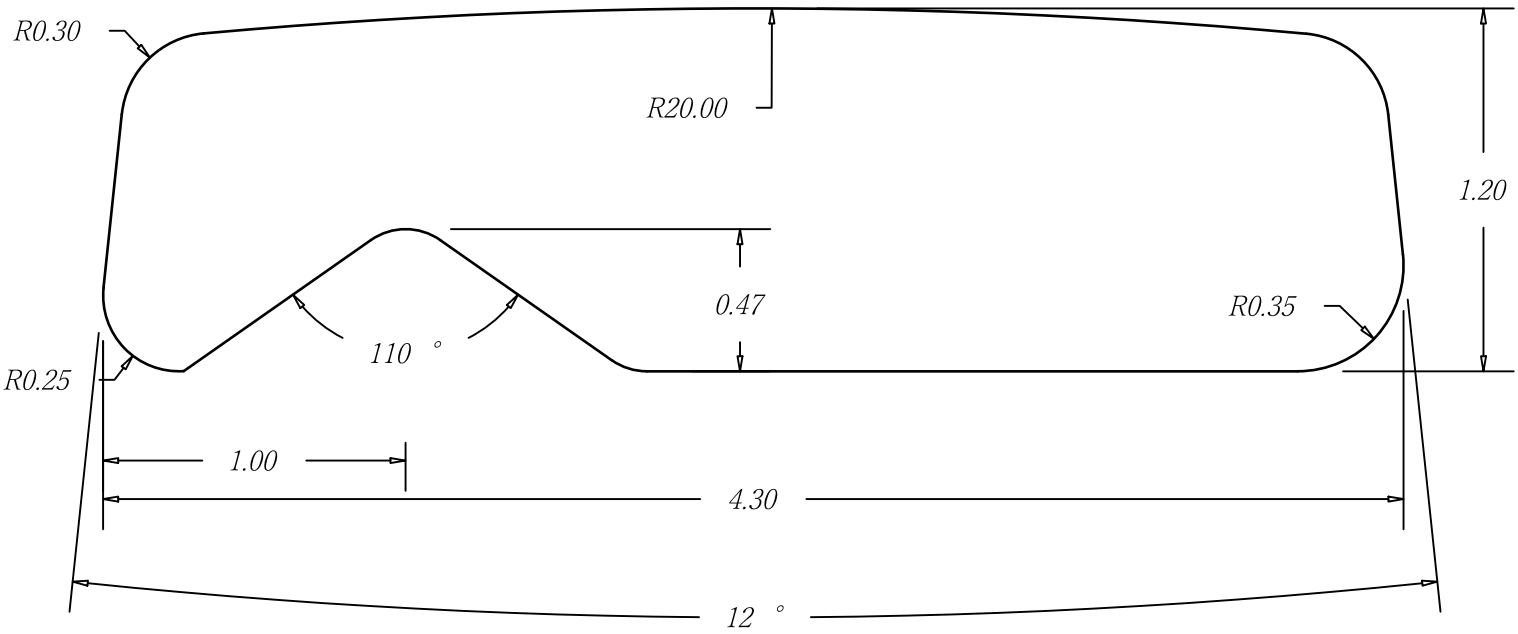20R K 4.3×1.2